Vibration Measuring Tools For Rotary Pumping Machine With Accelerometer MEMS Sensor

1st Basith Adli
Department of Control and Computer Engineering
Institut Teknologi Bandung
Bandung, Indonesia

2nd Pranoto Hidaya Rusmin
Department of Control and Computer Engineering
Institut Teknologi Bandung
Bandung, Indonesia

***Abstract*— This paper presents research on the design of vibration measuring devices, especially in detecting damage to a rotary machine, using an accelerometer sensor. The type of accelerometer sensor used is a Micro Electrical Mechanical System (MEMS), MEMS Accelerometer is designed to be able to achieve technical functions, specifically the electromechanical function. The MEMS accelerometer sensor and the conventional accelerometer sensor for measuring vibration on a rotary machine, are both sensors that produce an acceleration value to measure vibrations in the machine. But the advantages possessed by MEMS sensors include a relatively cheap price, three axes, and can be applied in embedded systems. So with these advantages, the MEMS accelerometer sensor can be used as an alternative sensor for measuring vibration. The MEMS accelerometer sensor that will be used is the ADXL345 Accelerometer. Besides, the advantage of the ADXL345 accelerometer sensor is that it already has an Analog to Digital Converter (ADC) and digital filter, so that this sensor can make faster computing in the acquisition of data in the form of digital data when compared to other MEMS accelerometer sensors without ADC. The results of the measurements will be used as material for vibration analysis on the machine in the form of a frequency spectrum with the Fast Fourier Transform (FFT) method.**

Keywords—vibration, MEMS, ADXL345, Accelerometer, Fast Fourier Transform, Rotary Machine

I. Introduction

Maintenance of machinery such as motors is essential to a plant in production. With maintenance, it will decrease the production costs due to the replacement of failed machinery and downtime resulting from the broken machinery. Maintenance can be done on a set schedule which eliminates losses due to unplanned downtime, but the production cost is still high due to the replacement of machinery that is still in good condition [1].

Vibration in machinery is mainly due to the faults of the rotating machine. Using vibration analysis, the health of the machine can be evaluated, as it has many benefits. Vibration analysis is mainly used in predictive maintenance in factories or industries. This method allows early problem detection in rotating machinery [2].

To be able to detect vibrations on rotary machinery, a vibration sensor is needed. In industry the sensors used are conventional. In addition to conventional sensors, there are also sensors with relatively low prices, namely sensors with Micro Electrical Mechanical System (MEMS) technology. MEMS is a microsystem with electromechanical function capabilities both as a microsensor or microactuator. One of the vibration sensors with MEMS technology is the MEMS accelerometer [3].

II. Related Works

In the design of vibration measuring devices, several studies have been done. In research [4] researchers present inexpensive vibrational sensors from polyurethane materials by providing piezo-resistive properties to the material. And the results of this study present a sensor with 80 Hz bandwidth. The second research [2] presents the design of vibration measuring devices using the MEMS accelerometer MMA7455L using LabView as a GUI for monitoring. The third study [1] presents the device of vibration measuring devices using MEMS accelerometer LSM6DS3. The Fourth Research [5] presents the design of vibration measuring devices with MEMS accelerometer ADXL203 to determine the characteristics of vibration on an electric motor. And in subsequent studies [6] presents an analysis of the performance of the MEMS accelerometer system that can be used to monitor vibration characteristics.

This paper describes the development of a vibration sensor in the rotary machine motor with a MEMS accelerometer sensor. This system can be used in predictive maintenance by doing a vibration analysis of the machine part. The system detects vibration, carries out signal analysis and machine diagnosis. The development of this sensor technology presents good dynamic specifications, with lower prices and less power consumption compared to conventional accelerometers in general. MEMS accelerometers are also easy to use and easy to integrate into harsh environments. These advantages of the MEMS accelerometer remains good and can promise vibration sensing in rotary motor machines [5].

In this research, The different sensor ADXL345 MEMS accelerometer sensor will be used to detect mechanical errors related to vibration analysis on rotary machinery. In its work will be focused on detecting rotary machines in several circumstances, namely in a good machine state and some fault to the rotary machine including unbalance, misalignment, and looseness. Fast Fourier Transform (FFT) analysis is used to determine the shape of the frequency spectrum. To present the results of measurement vibration, data processing uses MATLAB.

III. Background

A. Predictive Maintenance

Maintenance is an activity to restore a condition of equipment where it aims to be able to carry out the functions as the machine should. Failure in a system often results in small losses to large losses. Maintenance is needed to be able to maintain a component or equipment so that the system can run properly.

thorized licensed use limited to: CENTRO FED DE EDUCACAO TECNOLOGICA DE MINAS GERAIS. Downloaded on September 27,2024 at 20:56:04 UTC from IEEE Xplore. Restrictions app

In this research, the maintenance method that will be discussed is Predictive or condition-based maintenance. From several Predictive maintenance approaches, the most popular and suitable method commonly used to measure and analyze rotary motor engines is Vibration Analysis [7].

B. Vibration of Machine

Vibration is a repetitive motion with a fast tempo depending on the frequency. In general, the vibration of the machine is a back and forth movement of the machine as a whole or mechanical component of force reaction that affects both the force inside the machine itself or the force from outside the machine. In the rotating machine, the magnitude and frequency presented in the frequency spectrum show the severity and specific location of the fault. The level of vibration limit severity based on ISO standard can be seen in Table I as follows [8]:

TABLE I. VIBRATION LIMIT SEVERITY ISO STANDARD 10816-1

Velocity Severity		Velocity Range Limits And Machine Classes ISO Standard 10816-1			
RMS (mm/sec)	PEAK (in/Sec)	Small Machines Class 1	Medium Machines Class 2	Large Machines	
				Rigid Supports Class 3	Less Rigid Supports Class 4
0.28	0.02	Good	Good	Good	Good
0.45	0.03				
0.71	0.04				
1.12	0.06	Satisfactory			
1.8	0.1		Satisfactory		
2.8	0.16	Unsatisfactory (Alert)		Satisfactory	
4.5	0.25		Unsatisfactory (Alert)		Satisfactory
7.1	0.4	Unacceptable (Danger)		Unsatisfactory (Alert)	
11.2	0.62		Unacceptable (Danger)		Unsatisfactory (Alert)
18	1			Unacceptable (Danger)	
28	1.56				Unacceptable (Danger)
45	2.51				

C. Fast Fourier Transform Method

Using Fast Fourier Transform analysis or spectrum analysis the wave form time domain will be converted into a wave of functions from the frequency domain. By analyzing vibrations on a machine, the FFT spectrum is a very useful method. If there are machine problems, the FFT spectrum can provide information to help determine the location of an error or damage to the machine. By looking for frequency the problem can be known to the machine by analyzing the FFT spectrum. The transformation process from time-domain waves to frequency domain waves can be shown in Fig. 1 as follows [9]:

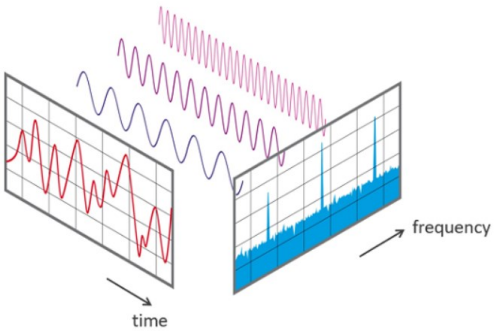

Fig. 1. The transformation process from time-domain waves to frequency domain waves.

By a graph from the spectrum Fig. 1. It can be analyzed, by looking at the characteristic of the frequency as a basis for analysis. The frequency provides information that causes the vibration and the amplitude indicates the severity in the fault or damage to the machine.

D. Accelerometer Sensor

Accelerometer sensor is the sensor most often used in industry as a vibration detection sensor on industrial machinery [3]. Because this sensor is relatively simple, sturdy in terms of reliability [8]. There are three types, or technologies in the accelerometer including the piezoresistive accelerometer, piezoelectric accelerometer, and capacitive MEMS accelerometer [10].

An accelerometer that is commonly used in industry is a piezoelectric accelerometer. Piezoelectric accelerometer uses piezoelectric material as its transducer component. The material contained in the piezoelectric is a crystal material that can produce an electrical voltage when given a vibration signal, then push the atoms inside. An explanation of the basic workings of the piezoelectric accelerometer is illustrated in the piezoelectric accelerometer block diagram section in Fig. 2 as follows [11].

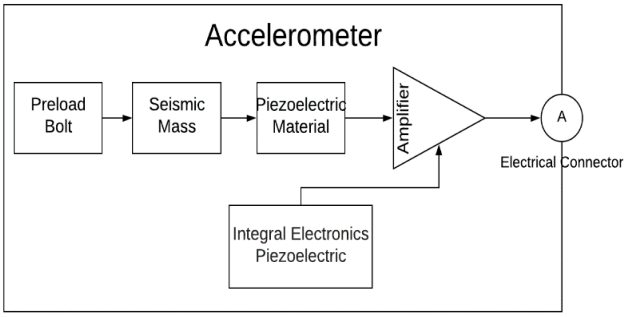

Fig. 2 Piezoelectric accelerometer block diagram

There is one type of accelerometer sensor which is working by using a batch integrated circuit processing technique. This sensor is like a miniature device or arrangement of devices that build electrical and mechanical components. This type of sensor is commonly called a Micro Electrical Mechanical System (MEMS), the advantage of MEMS is its low cost, which can reduce the size and mass of a sensor. An accelerometer is a vibration sensor that is most widely used as a vibration measurement transducer because this sensor is relatively simple, sturdy, and also in terms of reliability [8].

E. Accelerometer ADXL345 Sensor

ADXL345 is a motion sensor module or 3-axis acceleration with a 13bit resolution. The application includes tilt detection by monitoring changes in static attraction and dynamic acceleration arising from movements or collisions and vibrations. The accelerometer ADXL345 block diagram is shown in Fig. 3

thorized licensed use limited to: CENTRO FED DE EDUCACAO TECNOLOGICA DE MINAS GERAIS. Downloaded on September 27,2024 at 20:56:04 UTC from IEEE Xplore. Restrictions app

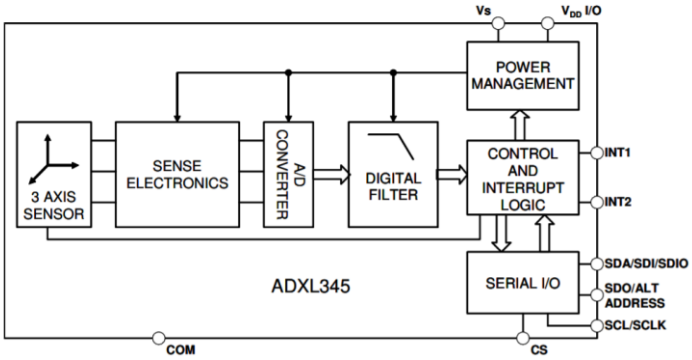

Fig. 3 Accelerometer ADXL345 block diagram

F. *Comparison of Conventional Accelerometer with ADXL345*

The MEMS accelerometer ADXL345 Sensor and the conventional accelerometer sensor are sensors that work to detect motion or vibration, by producing an acceleration value. The performance of each sensor depends on the parameter specifications of the sensor. Therefore the difference between the MEMS accelerometer ADXL345 sensor with conventional accelerometer sensors, in general, can be shown in the following Table II.

TABLE II. DIFFERENCE BETWEEN THE ADXL345 WITH CONVENTIONAL ACCELEROMETER

No.	Specification Parameter	MEMS ADXL345	Conventional
1.	Cost	Low Cost	Relatively Expensive
2.	*Axis*	*Triaxial*	Generally 1 axis but certain type there is 3 axis.
3.	Proses Data	Digital	Analog
4.	Sensitivity	Least Significant Bit per g (LSB/g)	mV/g or pC/g
5.	Nonlinearity	±0.5 %	±0.5% – 1%

This comparison is based on the MEMS accelerometer ADXL345 data sheet [12] with the general specification parameters of conventional accelerometer sensors [13][14]. From the specifications on the ADXL345 accelerometer block diagram, the ADXL345 accelerometer already has A/D Converter and digital filter, so the ADXL345 accelerometer is ready to be used as a sensor to detect vibration in rotary machines. [12].

G. *Microcontroller Arduino Uno*

This study will use the Arduino Uno microcontroller as a tool to process data from vibration sensors. Arduino is electronic equipment or open-source electronic circuit board in which there is the main component that is a microcontroller chip with an AVR type. The microcontroller is a chip or integrated circuit (IC) which can be programmed using a computer. The purpose of embedding the program on the microcontroller is that the electrical circuit can read the input, process the input, and then can produce the desired output [15]. The microcontroller serves as the brain that controls input, processes, and output from an electronic circuit. Because the main component of the Arduino is a microcontroller, the Arduino can be programmed using a computer as needed [16].

IV. DESIGN OF VIBRATION MEASURING DEVICES

. *Measurement Sensor Position*

In measuring vibration on a rotating machine, measurements are recommended in three directions or three axes. Under ideal conditions, most of the vibrational force is produced from a position perpendicular to the shaft. But on the other axis, vibration misalignment and bending shaft problems are created in the other axis plane. Mounting position sensor with 3 axes designated in Fig 4. And axes of the accelerometer in Fig 5 As follows:

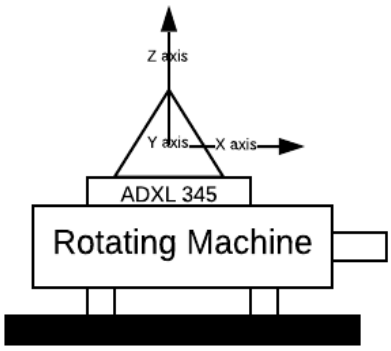

Fig. 4 Mounting position sensor with 3 axes

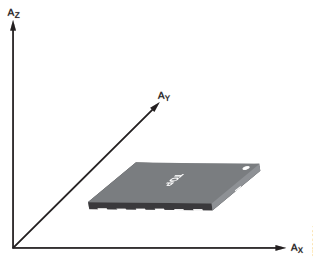

Fig. 5 Axes of acceleration sensitivity

By using the ADXL345 accelerometer sensor, vibration data are obtained from 3 axes. this is the advantage of using an accelerometer MEMS.

B. *Process Data*

The acceleration data obtained from the ADXL345 accelerometer sensor will be changed in the form of a frequency spectrum. But to get a better severity limit value, the acceleration data is converted to velocity data, so that the frequency is in the form mm/s. By changing this data, the severity limit on the machine can be referred to in Table I.

C. *Measurement System Design*

The measurement system design will be explained by the design block diagram which is part of the vibration meter design process. ADXL345 accelerometer will sense the vibration phenomenon that occurs in a rotating machine. Arduino Uno becomes a signal processor to acquire data obtained from the ADXL345 accelerometer. Personal Computer (PC) is used to upload programs into Arduino and display sensor data. The measurement system design scheme is shown in Fig. 8 as follows:

thorized licensed use limited to: CENTRO FED DE EDUCACAO TECNOLOGICA DE MINAS GERAIS. Downloaded on September 27,2024 at 20:56:04 UTC from IEEE Xplore. Restrictions app

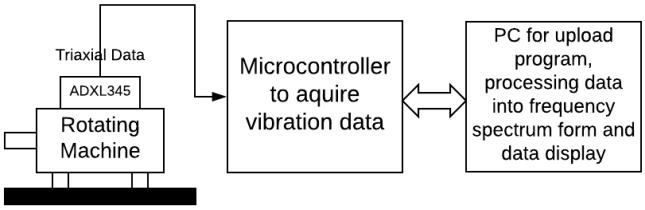

Fig. 6 sensor system in vibration measurement.

In Fig. 7. It is shown that the accelerometer sensor has been installed on the rotating pumping machine as a tool for sensing vibration phenomena. The microcontroller functions for data acquisition and for displaying graphs of the characteristics of the vibration of the rotating machine using a computer.

D. *The Overall Design*

The stages for the design of this study as a whole begin with a flow chart shown in Fig 8.

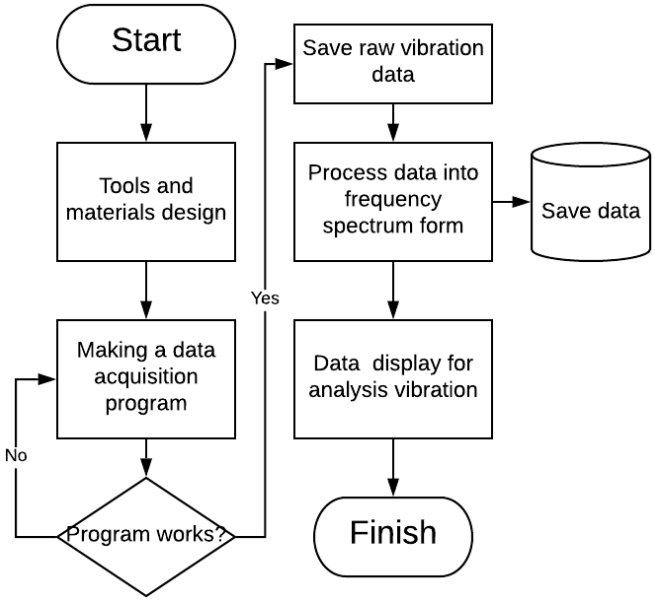

Fig. 7 The overall design

The frequency spectrum data will be used as material to analyze vibration that occurs in the rotary machine.

V. Implementation and Result

A. *Rotary Pumping Machine*

In this study, the vibration in the rotary machine will be detected. The picture and specifications of rotary pumping machine are shown in Fig 8 and Table III as follows:

Fig. 8 Rotary pumping machine

TABLE III. Specifications of Rotary Pumping Machine

No.	Parameter	Specification
1.	Model	Wasser PC-380 E
2.	Tipe	Small Machine
3.	Output Power	375 W
4.	Input Current	3.7 A
5.	Voltage	220 V

B. *Testing of Vibration Measurement*

The final stage of designing a vibration measuring instrument is to test the sensor to find out if this tool is functioning properly. The first stage is to take vibration data on a machine with 3 axes direction. The raw vibration data of the rotary pumping machine shown in Fig 9 as follows:

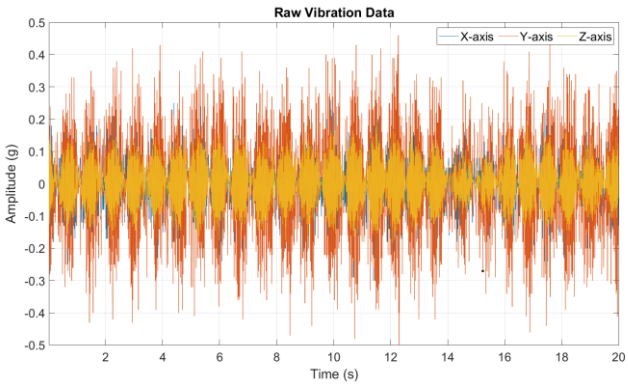

Fig. 9 Raw vibration data

After getting the raw vibration data, the next step is to change it to the frequency spectrum. The frequency spectrum of X, Y, and Z-axis is shown in Fig 10, 11, and 12 as follows:

thorized licensed use limited to: CENTRO FED DE EDUCACAO TECNOLOGICA DE MINAS GERAIS. Downloaded on September 27,2024 at 20:56:04 UTC from IEEE Xplore. Restrictions app

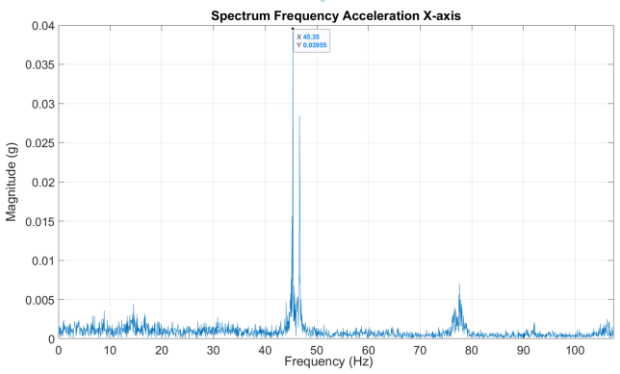

Fig. 10 Spectrum frequency acceleration X-axis

Fig. 10 is spectrum frequency acceleration of X-axis.

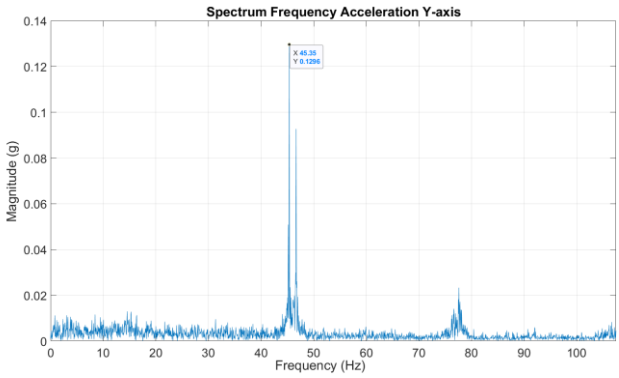

Fig. 11 Spectrum frequency acceleration Y-Axis

Fig. 11 is spectrum frequency acceleration of Y-axis.

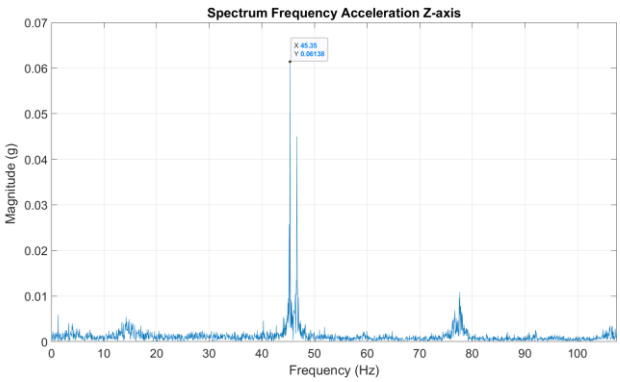

Fig. 12 Spectrum frequency acceleration Z-axis

Fig. 12 is spectrum frequency acceleration of Z-axis.

C. Limit Severity Vibration Machine

In determining severity limits using Table I, the next step is to display the frequency spectrum in the velocity value. Because according to [17] a part of the vibration force is produced in a position perpendicular to the axis, the axis to be analyzed is the Z-axis.

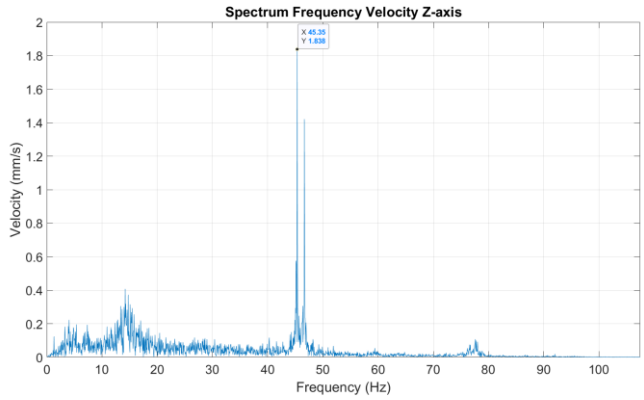

Fig. 13 Spectrum frequency velocity Z-axis

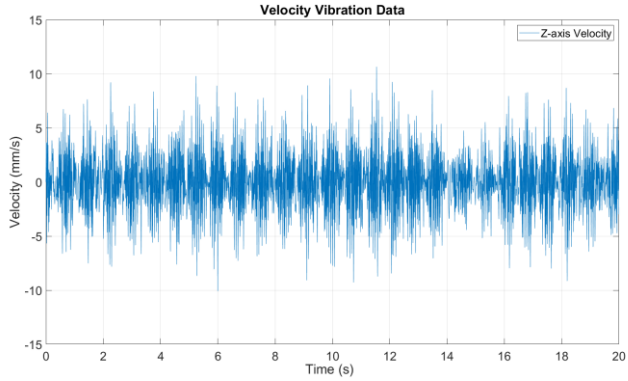

Fig. 14 Velocity Vibration Data Z-Axis

From Fig. 14 the RMS of the velocity Z-axis data is 2.6886 mm/s. From the results obtained, according to Table I, the state of the machine goes into a "satisfactory" state because the category of the machine is small machine (class 1). According Fig. 13 and by analyzing the frequency at 1x running speed (45.35 Hz), it can be seen that the machine has an unbalance condition, this makes the machine's frequency at 1x increases. In this way, the machine's maintenance can be done by correcting an unbalanced machine position. This is the benefit of predictive maintenance by vibration analysis.

VI. Conclusions

From the study that has been done, the following conclusions can be drawn:

- A vibration measuring device has been successfully manufactured for rotary pumping machines using the MEMS ADXL345 accelerometer.
- The analysis of the frequency spectrum shows that the measuring instrument can detect the vibration characteristics of a rotary pumping machine.
- By analyzing the vibration characteristics of the velocity frequency spectrum, according to Table I, it can be seen that the machine is in satisfactory condition with an RMS value of 2.566 mm/s.
- From the analysis of the frequency spectrum, it can be seen that the machine is in an unbalanced state.

References

[1] M. Zekveld and G. Hancke, "Vibration Condition Monitoring Using Machine Learning," *IECON 2018 - 44th Annu. Conf. IEEE Ind. Electron. Soc.*, vol. 1, pp.

thorized licensed use limited to: CENTRO FED DE EDUCACAO TECNOLOGICA DE MINAS GERAIS. Downloaded on September 27,2024 at 20:56:04 UTC from IEEE Xplore. Restrictions app

4742–4747, 2019.
[2] M. Y. Upadhye, P. B. Borole, and A. K. Sharma, "Real-time wireless vibration monitoring system using LabVIEW," *2015 Int. Conf. Ind. Instrum. Control. ICIC 2015*, no. Icic, pp. 925–928, 2015.
[3] A. Z. Rohman, "Rancang Bangun Alat Ukur Getaran Mesin berbasis Arduino," *Tek. Elektro UNNES*, vol. 16, no. 1, pp. 35–44, 2015.
[4] R. Ajith, A. Tewari, D. Gupta, and S. Tallur, "Low-Cost Vibration Sensor for Condition-Based Monitoring Manufactured From Polyurethane Foam," *IEEE Sensors Lett.*, vol. 1, no. 6, pp. 1–4, 2017.
[5] I. A. Helal, T. H. Vuong, J. David, N. M. Bellaaj, and M. Pietrzak-David, "Vibration monitoring based on MEMS accelerometers," *16th Int. Conf. Sci. Tech. Autom. Control Comput. Eng. STA 2015*, pp. 240–245, 2016.
[6] A. Sabato, C. Niezrecki, and G. Fortino, "Wireless MEMS-Based Accelerometer Sensor Boards for Structural Vibration Monitoring: A Review," *IEEE Sens. J.*, vol. 17, no. 2, pp. 226–235, 2017.
[7] I. Connection Technology Center, "Industrial Vibration Analysis for Predictive Maintenance and Improved Machine Reliability," no. 800, p. 5.
[8] S. Sutar, V. Warudkar, and R. Sukathankar, "Vibration Analysis Of Rotating Machines With Case Studies," *Int. J. Sci. Technol. Res.*, vol. 7, no. 7, pp. 70–76, 2018.
[9] Nt. Audio, "Fast Fourier Transformation FFT - Basics." [Online]. Available: https://www.nti-audio.com/en/support/know-how/fast-fourier-transform-fft. [Accessed: 14-Jun-2020].
[10] S. Hanly, "Accelerometers: Taking the Guesswork out of Accelerometer Selection," 2016. [Online]. Available: https://blog.endaq.com/accelerometer-selection. [Accessed: 04-May-2020].
[11] N. Instrument, "Measurring Vibration with Acceleromerters," 2019. [Online]. Available: https://www.ni.com/en-id/innovations/white-papers/06/measuring-vibration-with-accelerometers.html. [Accessed: 04-May-2020].
[12] Analog Devices, "Digital Accelerometer ADXL345 Data Sheet," p. 40, 2009.
[13] S. Poinsot, "Vibration sensors.," pp. 84–91, 1984.
[14] V. Transmitters and P. Sensors, "Industrial Vibration Sensors, Switches & Instrumentation," 2012.
[15] F. Nurfalah, "Arduino dan Raspberry."
[16] L. M. Herger and M. Bodarky, "Engaging students with open source technologies and Arduino," *ISEC 2015 - 5th IEEE Integr. STEM Educ. Conf.*, pp. 27–32, 2015.
[17] S K F Reliability Systems, "SKF Reliability Systems ® Vibration Diagnostic Guide CM5003."

thorized licensed use limited to: CENTRO FED DE EDUCACAO TECNOLOGICA DE MINAS GERAIS. Downloaded on September 27,2024 at 20:56:04 UTC from IEEE Xplore. Restrictions app